REVISIONS			
REV	DESCRIPTION	DATE	APPROVED

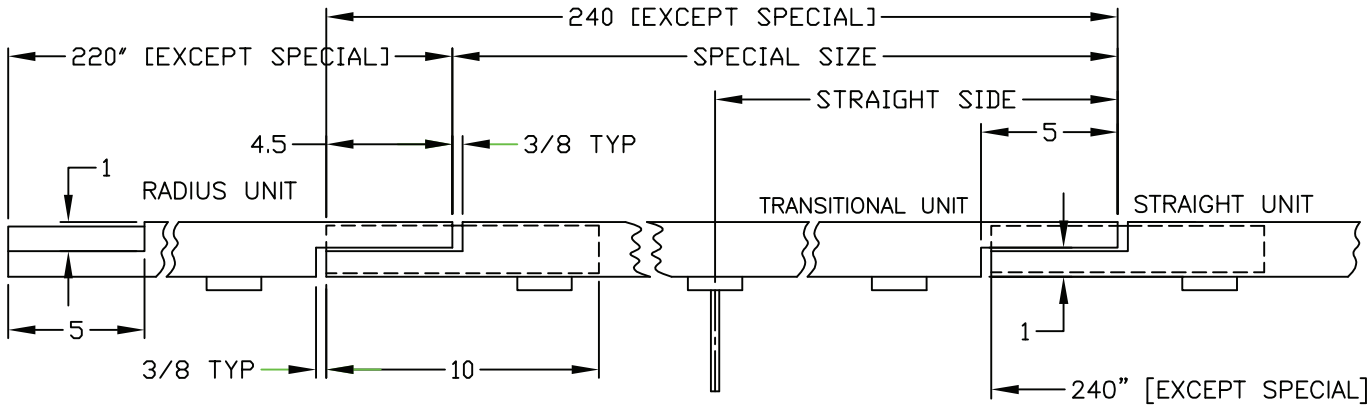

DIMENSIONS WILL VARY FROM STADIUM TO STADIUM.

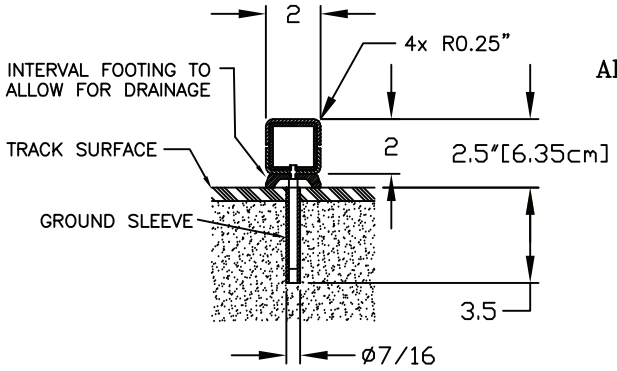

ALL PCS NUMBERED

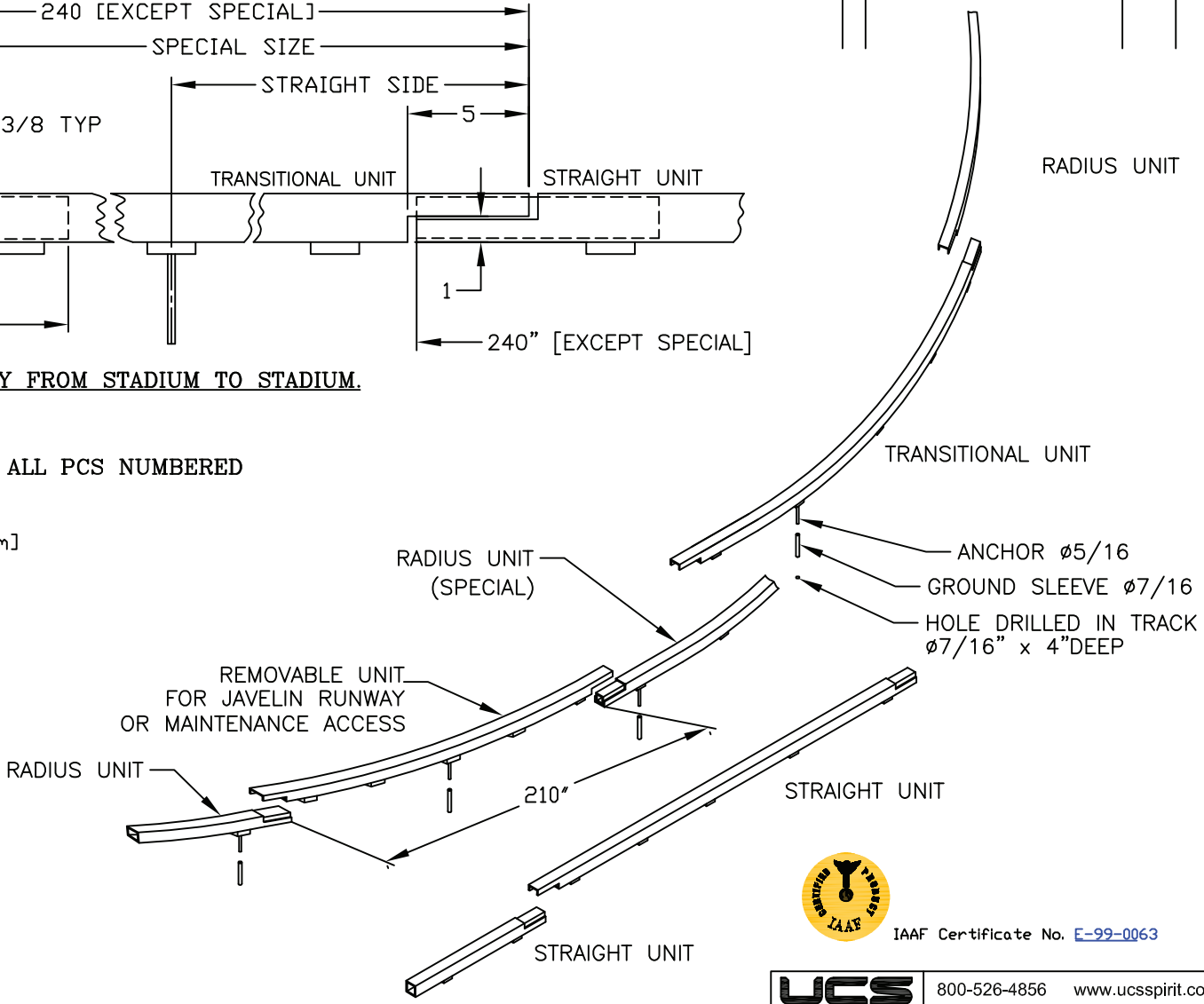

IAAF Certificate No. E-99-0063

This drawing contains information proprietary to UCS Inc., any reproduction disclosure or use of this drawing is EXPRESSLY PROHIBITED unless agreed in writing by UCS Inc.

PROTECTIVE FINISH	NUMBER
POWDER COATED GOLD	792–9410
POWDER COATED SILVER	792–9411
NON–ANODIZED	792–9412
WHITE POWDER COATED	792–9413

UNLESS OTHERWISE SPECIFIED
DIMENSIONS ARE IN INCHES
DECIMAL TOL: 2 PLACES ±.03, 3 PLACES ±.010
ANGULAR TOL: ± 1/2°
MAT'L: ALUMINUM
PROTECTIVE FINISH: POWDER COATED GOLD SILVER, WHITE, NON P.C.

CONTRACT NO. SAMPLE

APPROVALS	DATE
DRAWN A.ANGELOV	8.18.99
CHECKED	
ENGINEER	
CHECKED	

UCS 800-526-4856 www.ucsspirit.com
UCS 511 HOFFMAN RD. LINCOLNTON, N.C. 28092

TITLE
PORTABLE ALUMINUM TRACK CURBING

SIZE	FILE	DWG NO.	REV.
	CURBING	792–9400–00 ASSY	–

SCALE NONE | SHEET 1 OF 1