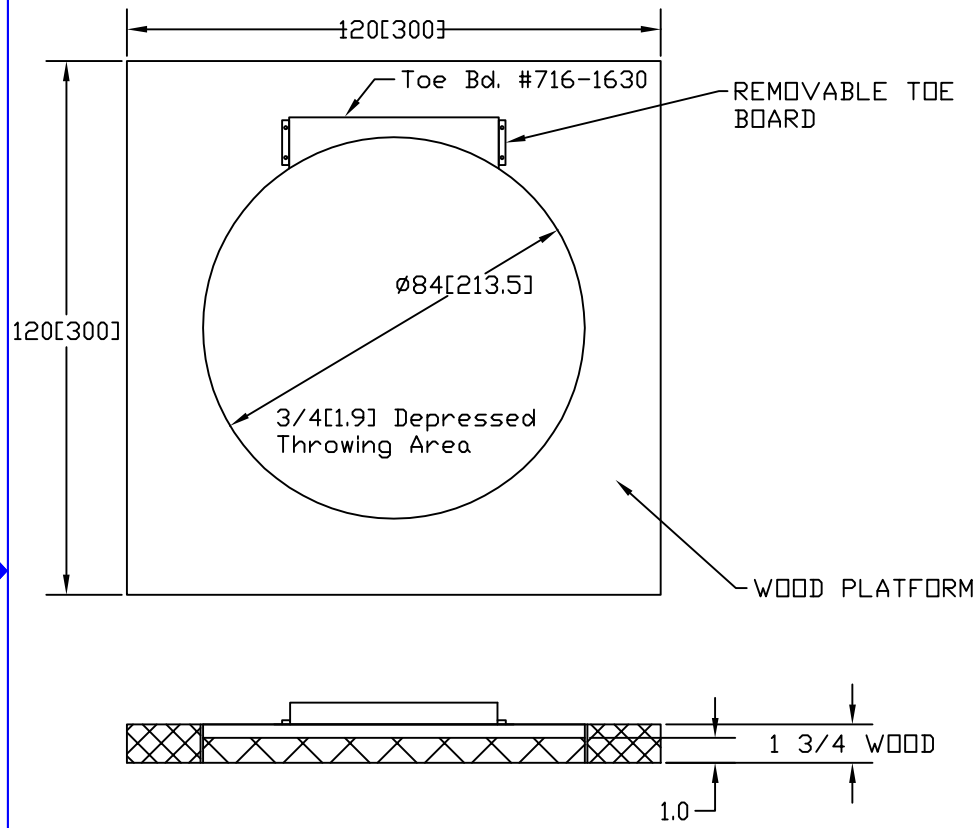


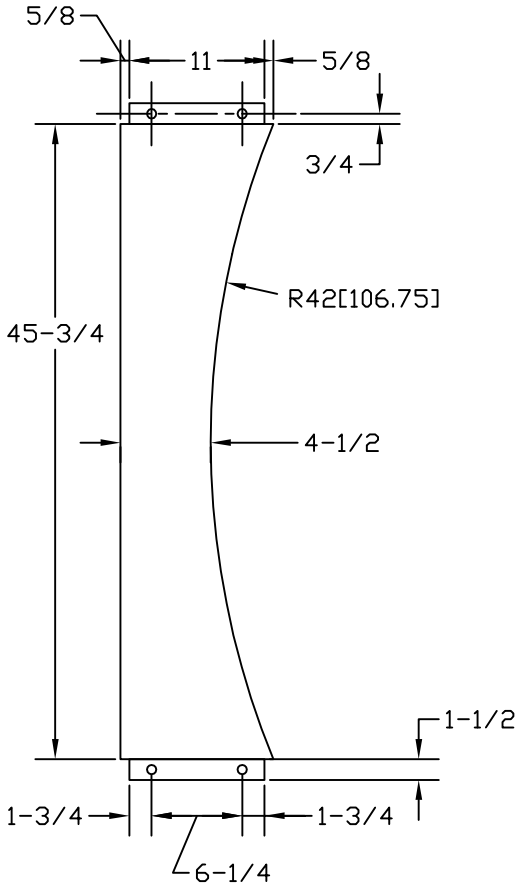


NOTE: ALL DIMENSIONS GIVEN IN INCHES. [ ] DENOTES CENTIMETERS

This drawing contains information proprietary to UCS Inc., any reproduction disclosure or use of this drawing is EXPRESSLY PROHIBITED unless agreed in writing by UCS Inc.

| | | | |
|---|---|---|---|
| UNLESS OTHERWISE SPECIFIED<br>DIMENSIONS ARE IN INCHES<br>DECIMAL TOL: ANGULAR TOL:<br>1 PLACE ± 0.031 ± 1/2°<br>2 PLACES ± 0.015<br>3 PLACES ± 0.005 | CONTRACT NO. | UCS 100 3 RD AVE KEARNY, NJ, 07032 | |
| | APPROVALS / DATE | TITLE | |
| | DRAWN A.ANGELOV 11/11/99 | SHOT PUT PLATFORM AND TOE BOARD | |
| MATERIAL: | CHECKED | | |
| | ENGINEER | | |
| | CHECKED | SIZE B / FILE / DWG NO. 725-2510 | REV. — |
| PROTECTIVE FINISH: | | SCALE NONE | SHEET 1 OF 1 |